Coaxial Switch - T_C13KMF Series
Terminated, SP3T, SMA, Normally Open, 1 Set Indicators

REV. A

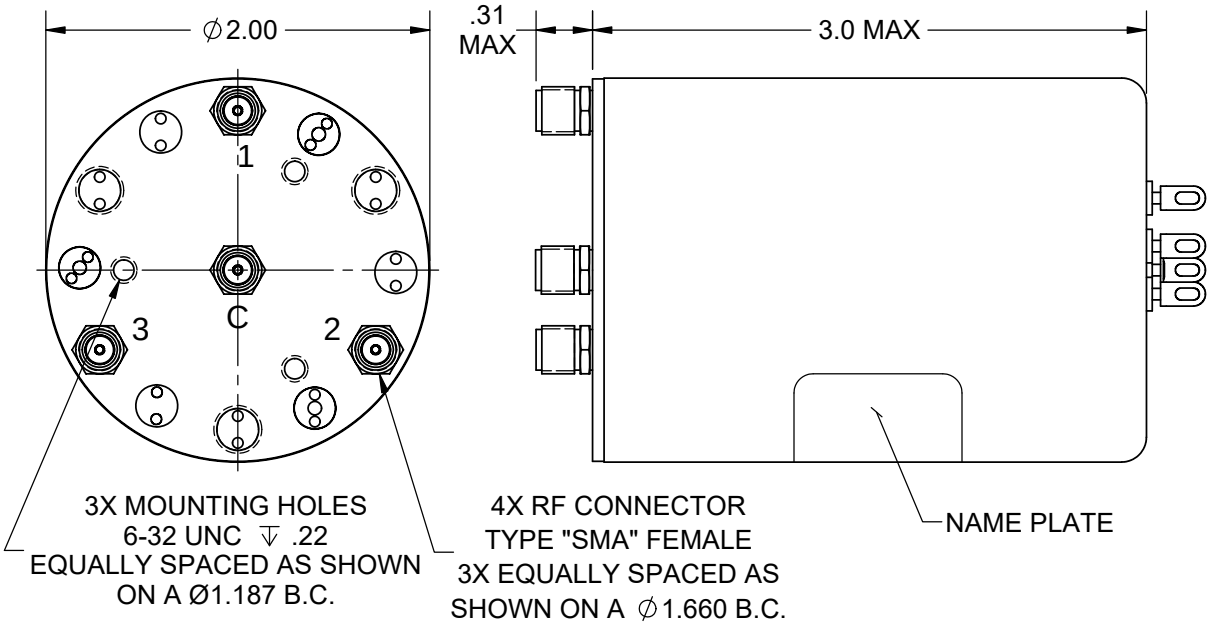

OPTION 1 - SOLDER TERMINALS

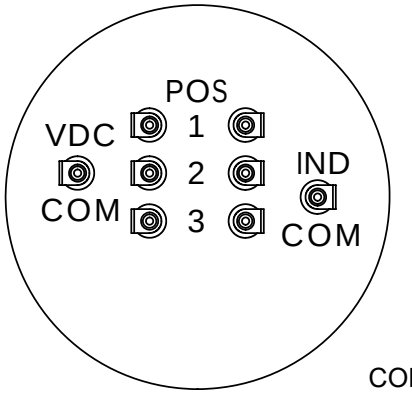

OPTION 4 - D-SUB

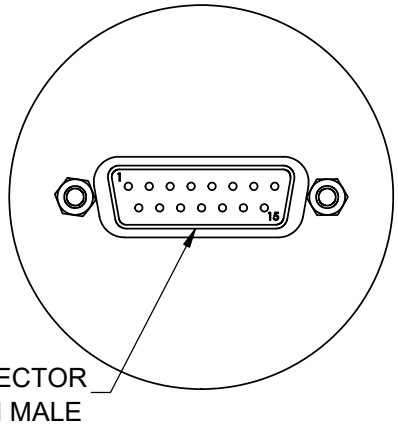

STANDARD - 1 SET INDICATORS OPTION A - NO INDICATORS

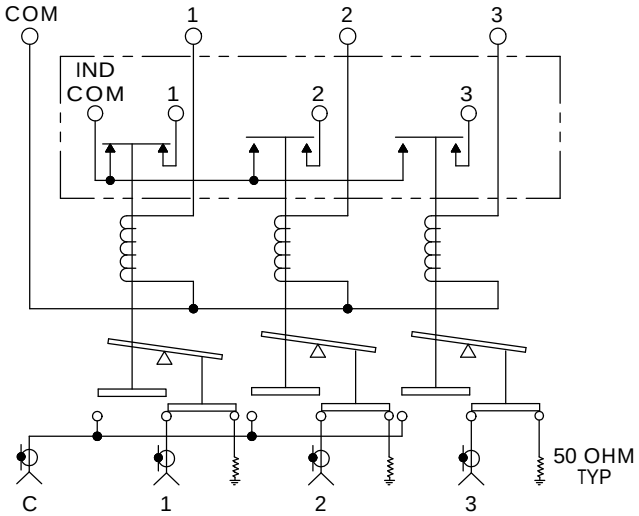

SCHEMATIC DIAGRAM SHOWN IN
NORMALLY OPEN POSITION (DE-ENERGIZED)

Frequency (GHz):	DC to 3.0	3.0 to 8.0	8.0 to 12.4	12.4 to 18.0
VSWR (Max):	1.2:1	1.3:1	1.4:1	1.5:1
Insertion Loss (Max):	0.2 dB	0.3 dB	0.4 dB	0.5 dB
Isolation (Min):	80 dB Min.	70 dB Min.	60 dB Min.	60 dB Min.
Power (Max):	100 WCW	75 WCW	60 WCW	45 WCW

Termination Power:	1 Watt Max. per Position
RF Impedance:	50 ohms
Voltage:	See Table
Current:	See Table
Switching Time:	20 mS Max.

Material:	Aluminum (RF Assy)
RF Contacts:	Break Before Make
Finish:	Iridite per MIL-DTL-5541, Type II Class 3 Cover Black

STYLE	ENVIRONMENT	OPERATING TEMPERATURE	NON-OPERATING TEMPERATURE	HUMIDITY
TO	SHELTERED	0 °C to +70 °C	-40 °C to +100 °C	0 to 95%
TW	OUTDOOR	-40 °C to +85 °C	-55 °C to +100 °C	0 to 100%
TA	AIRBORNE	-54 °C to +85 °C	-55 °C to +100 °C	0 to 100%

RoHS Compliant (except AIRBORNE)

OPTION	VOLTAGE	CURRENT @ 20º C
8	11 TO 13 VDC	260 mA Max @ 12 VDC
9	14 TO 16 VDC	260 mA Max @ 15 VDC
7	22 TO 26 VDC	225 mA Max @ 24 VDC
2	26 TO 30 VDC	240 mA Max @ 28 VDC

Model # ex. T[O]C13KMF [2] [A] [1]

Style Voltage Indicators Interface