REV. B

# Coaxial Switch - S_TC12EKF Series
# SPDT, TTL, 2.9mm, Failsafe, 1 Set Indicators

STANDARD - 1 SET INDICATORS  OPTION A - NO INDICATORS

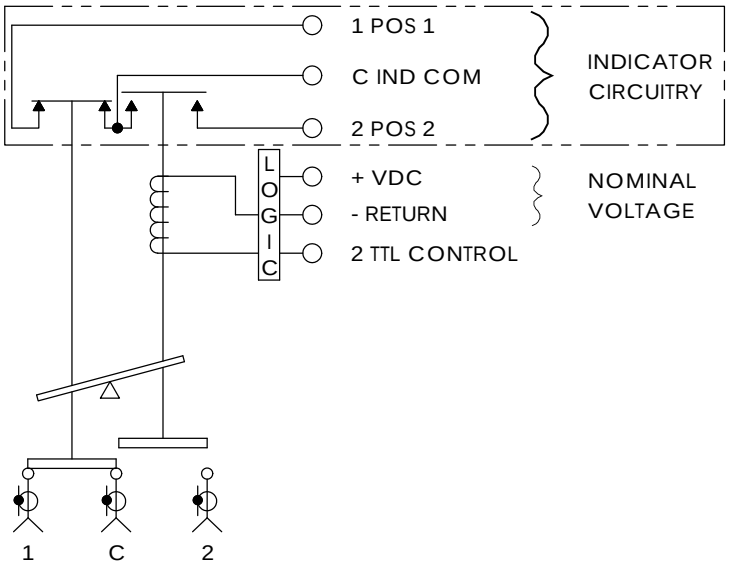


SCHEMATIC DIAGRAM SHOWN IN FAILSAFE POSITION 1

OPTION 1 - SOLDER TERMINALS

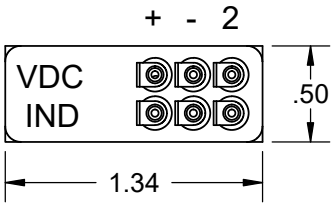


OPTION 4 - D-SUB

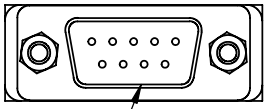


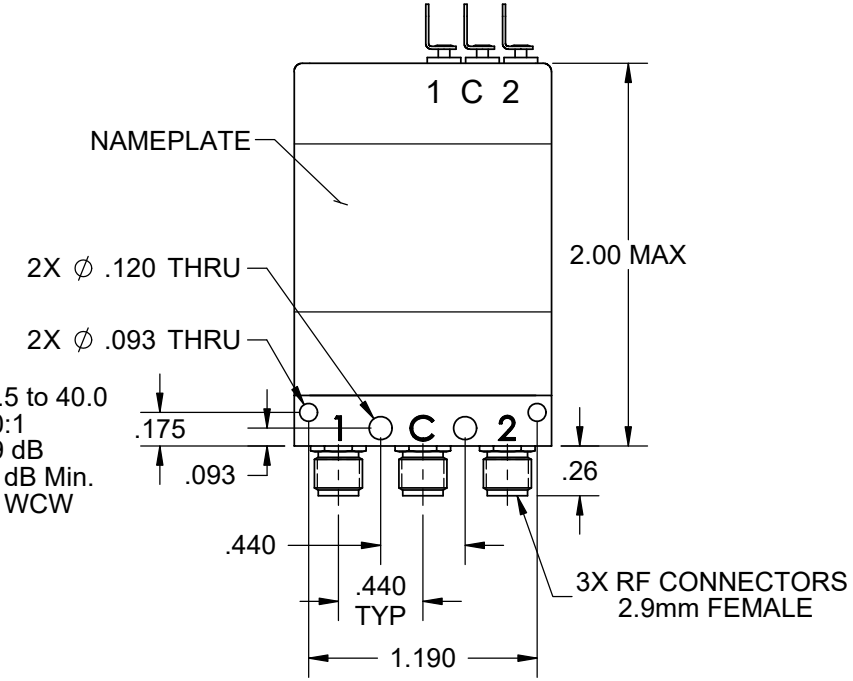


| | | | | | |
|---|---|---|---|---|---|
| Frequency (GHz): | DC to 6.0 | 6.0 to 12.0 | 12.0 to 18.0 | 18.0 to 26.5 | 26.5 to 40.0 |
| VSWR (Max): | 1.3:1 | 1.4:1 | 1.5:1 | 1.7:1 | 2.0:1 |
| Insertion Loss (Max): | 0.3 dB | 0.4 dB | 0.5 dB | 0.7 dB | 0.9 dB |
| Isolation (Min): | 70 dB Min. | 60 dB Min. | 60 dB Min. | 55 dB Min. | 50 dB Min. |
| Power (Max): | 100 WCW | 70 WCW | 45 WCW | 25 WCW | 10 WCW |

| | |
|---|---|
| RF Impedance: | 50 ohms |
| Voltage: | See Table |
| Current: | See Table |
| TTL Logic: | |
| Voltage High: | 2.4 to 5.5 VDC |
| Current High: | 5 mA max. @ 5 VDC |
| Switching Time: | 20 mS Max |
| Material: | Aluminum (RF Assy) |
| RF Contacts: | Break Before Make |
| Finish: | Iridite per MIL-DTL-5541, Type II Class 3<br>Cover Black |

| STYLE | ENVIRONMENT | OPERATING TEMPERATURE | NON-OPERATING TEMPERATURE | HUMIDITY |
|---|---|---|---|---|
| SO | SHELTERED | 0 °C to +70 °C | -40 °C to +100 °C | 0 to 95% |
| SW | OUTDOOR | -40 °C to +85 °C | -55 °C to +100 °C | 0 to 100% |
| SA | AIRBORNE | -54 °C to +85 °C | -55 °C to +100 °C | 0 to 100% |

RoHS Compliant (except AIRBORNE)

| OPTION | VOLTAGE | CURRENT @ 20º C |
|---|---|---|
| 8 | 11 TO 13 VDC | 300 mA Max @ 12 VDC |
| 9 | 14 TO 16 VDC | 250 mA Max @ 15 VDC |
| 7 | 22 TO 26 VDC | 250 mA Max @ 24 VDC |
| 2 | 26 TO 30 VDC | 280 mA Max @ 28 VDC |

Model # ex. S[O]TC12EKF [2] [A] [1]

Style  Voltage  Indicators  Interface