Coaxial Switch - H_C12HQF Series
SPDT, 7/16, Failsafe, 1 Set Indicators

REV. A

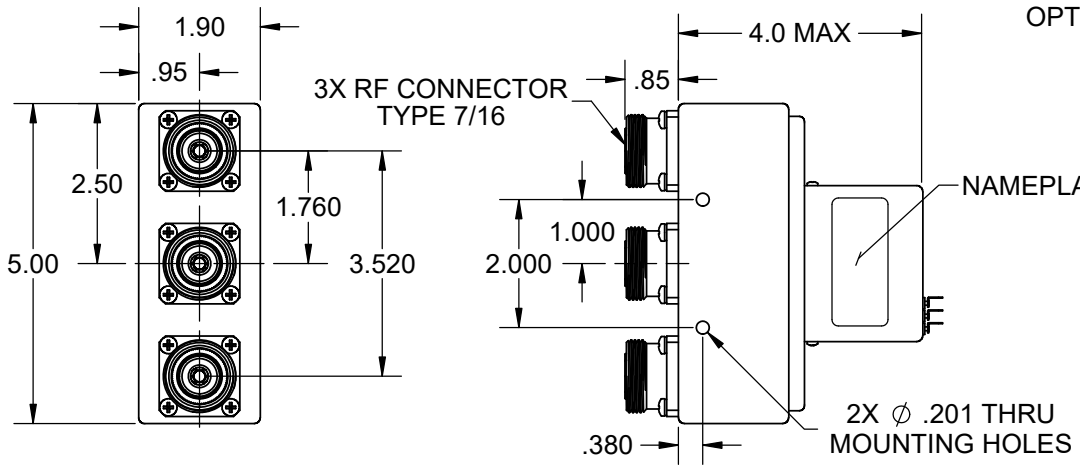

OPTION 1 - SOLDER TERMINALS

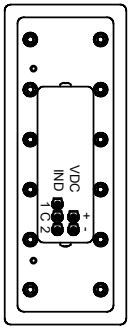

OPTION 4 - D-SUB

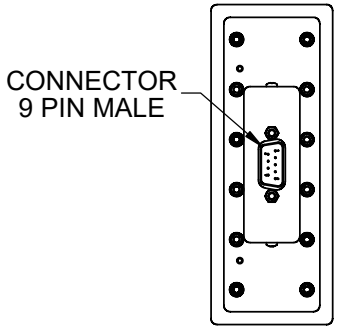

STANDARD - 1 SET INDICATORS OPTION A - NO INDICATORS

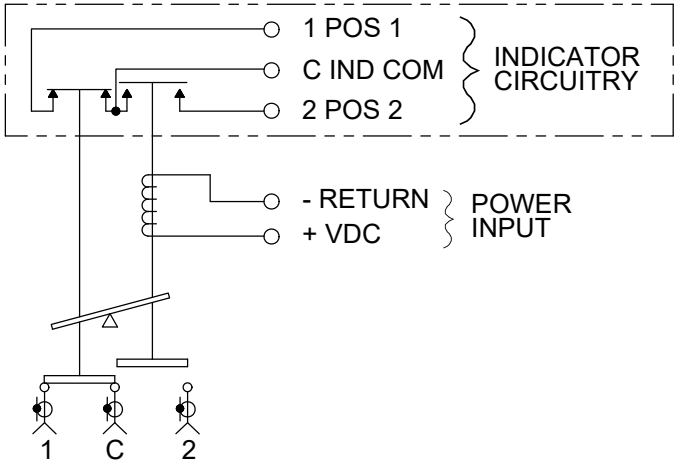

SCHEMATIC DIAGRAM SHOWN
IN FAILSAFE POSITION 1

OPTION	VOLTAGE	CURRENT @ 20º C
8	11 TO 13 VDC	300 mA Max @ 12 VDC
9	14 TO 16 VDC	250 mA Max @ 15 VDC
7	22 TO 26 VDC	250 mA Max @ 24 VDC
2	26 TO 30 VDC	280 mA Max @ 28 VDC

Frequency
VSWR
Insertion Loss
Isolation
Power
} CONSULT FACTORY WITH YOUR REQUIREMENTS

RF Impedance:	50 ohms
Voltage:	See Table
Current:	See Table
Switching Time:	50 mS max.
Material:	Aluminum (RF Assy)
RF Contacts:	Break Before Make
Finish:	Iridite per MIL-DTL-5541, Type II Class 3 Cover Black

STYLE	ENVIRONMENT	OPERATING TEMPERATURE	NON-OPERATING TEMPERATURE	HUMIDITY
HO	SHELTERED	0 °C to +70 °C	-40 °C to +100 °C	0 to 95%
HW	OUTDOOR	-40 °C to +85 °C	-55 °C to +100 °C	0 to 100%
HA	AIRBORNE	-54 °C to +85 °C	-55 °C to +100 °C	0 to 100%

RoHS Compliant (except AIRBORNE)

Model # ex. H[O]C12HQF [2] [A] [1]

Style — Voltage — Indicators — Interface